D _ _ _ _ _ _ _ _ X _ X _

Style
D= DEPIANT

Efficiency:
70% = 70
85% = 85
95% = 95

Of Pockets
See Chart

Header:
Standard = Blank
Cambridge = C
1" Exact Header = E

Type:
Standard = Blank
Gasketing locations =
With Loops = L

U = Upstream
D = Downstream
UD = Both Sides
SA = Side Access
P = Perimeter

Size (WxHxD)
Example 24x24x30

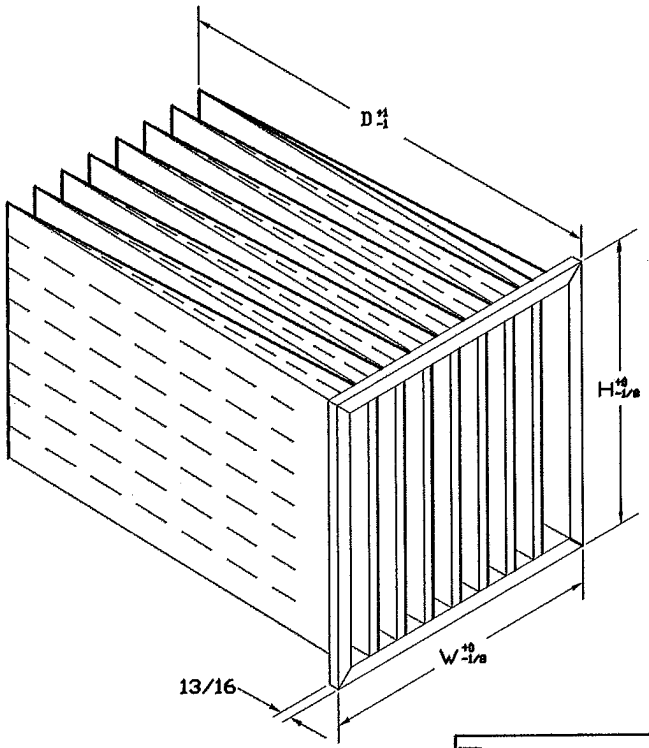

SIZE W X H	# OF POCKETS	
24 X 24	23-5/16 x 23-5/16	05 - 12
12 X 24	11-5/16 x 23-5/16	03 - 05
24 X 12	23-5/16 x 11-5/16	05 - 12
20 X 24	19-5/16 x 23-5/16	04 - 09
24 X 20	23-5/16 x 19-5/16	05 - 12
20 X 20	19-5/16 x 19-5/16	04 - 09
16 X 20	15-5/16 x 19-5/16	03 - 07
20 X 16	19-5/16 x 15-5/16	04 - 09
16 X 25	15-5/16 x 24-5/16	03 - 07
25 X 16	24-5/16 x 15-5/16	05 - 12
20 X 25	19-5/16 x 24-5/16	04 - 09
25 X 20	24-5/16 x 19-5/16	05 - 12

EXAMPLE MODEL: D9508 24X24X30

STANDARD CONSTRUCTION
1. Continuous synthetic & hydrophobic fiber
2. Pockets are multi-row stitched
3. Self supporting holding pockets
4. Galvanized Steel Header
5. Galvanized Steel Pocket Retainers

NOTES
1. Three Efficiencies Available
   90-95% ASHRAE 52.1-1992, MERV 15 ASHRAE 52.2-1999
   80-85% ASHRAE 52.1-1992, MERV 15 ASHRAE 52.2-1999
   70-75% ASHRAE 52.1-1992, MERV 12 ASHRAE 52.2-1999
2. Final Resistance: 1" W.G.
3. Rated Velocity: 500 FPM
4. Maximum Operating Temperature: 200 deg. F
5. Class 2 filter per U.L. Standard 900

Purolator®
P.O. Box 32578
Louisville, KY 40232
P: 866-925-2247
F: 502-961-0930
www.purolatorair.com

CONTACT FACTORY TO
VERIFY REVISION LEVEL

TOLERANCES
UNLESS OTHERWISE SPECIFIED
FRACTIONAL –
DECIMAL –
ANGLES –

ALL DIMENSIONS IN INCHES

DRAWING NAME: DEFIANT BAG			
APPROVED BY: K.C.	SPECIFICATION NO.: MKT-P-00315 PG1		PAGE: 1 OF 2
SCALE: NONE	DWG. SIZE: A	REVISION: A	REVISION DATE: 05-19-08

CONFIDENTIAL - DO NOT COPY. THIS MATERIAL IS TRADE SECRET AND PROPRIETARY BEING EXCLUSIVELY OWNED BY CLC AIR. THE EXPRESSION OF THE INFORMATION CONTAINED HEREIN IS PROTECTED UNDER FEDERAL COPYRIGHT LAWS AND ALL COPYING IS PROHIBITED AND MAY BE SUBJECT TO CRIMINAL PENALTIES.

PERFORMANCE DATA: DEFIANT 70/85/95%

NOMINAL SIZE WXHXD	# OF POCKETS	MEDIA AREA SQ.FT.	CFM CAPACITY HIGH	70% MODEL NUMBER	RESIST IN W.G.	85% MODEL NUMBER	RESIST. IN W.G.	95% MODEL NUMBER	RESIST. IN. W.G.
24X24X12	12	49	2000	D7012 4412	.21	D8512 4412	.44	D9512 4412	.52
24X24X26	10	90	2500	D7010 4426	.33	D8510 4426	.50	D9510 4426	.54
20X24X26	8	73	2000	D7008 0426	.33	D8508 0426	.50	D9508 0426	.54
20X20X26	8	66	1750	D7008 0026	.33	D8508 0026	.50	D9508 0026	.54
12X24X26	5	45	1250	D7005 2426	.33	D8505 2426	.50	D9505 2426	.54
24X24X19	10	66	2000	D7010 4419	.22	D8510 4419	.35	D9510 4419	.47
20X24X19	8	56	1600	D7008 0419	.22	D8508 0419	.35	D9508 0419	.47
20X20X19	8	48	1120	D7008 0019	.22	D8508 0019	.35	D9508 0019	.47
12X24X19	5	33	1000	D7005 2419	.22	D8505 2419	.35	D9505 2419	.47
24X24X12	10	42	2000	D7010 4412	.20	D8510 4412	.42	D9510 4412	.54
20X24X12	8	34	1700	D7008 0412	.20	D8508 0412	.42	D9508 0412	.54
20X20X12	8	31	1400	D7008 0012	.20	D8508 0012	.42	D9508 0012	.54
12X24X12	5	21	1000	D7005 2412	.20	D8505 2412	.42	D9505 2412	.54
24X24X26	8	73	2500	D7008 4426	.27	D8508 4426	.48	D9508 4426	.52
20X24X26	6	57	2000	D7006 0426	.27	D8506 0426	.48	D9506 0426	.52
20X20X26	6	50	1750	D7006 0026	.27	D8506 0026	.48	D9506 0026	.52
12X24X26	4	37	1250	D7004 2426	.27	D8504 2426	.48	D9504 2426	.52
24X24X19	8	54	2000	D7008 4419	.21	D8508 4419	.38	D9508 4419	.44
20X24X19	6	42	1600	D7006 0419	.21	D8506 0419	.38	D9506 0419	.44
20X20X19	6	36	1120	D7006 0019	.21	D8506 0019	.38	D9506 0019	.44
12X24X19	4	27	1000	D7004 2419	.21	D8504 2419	.38	D9504 2419	.44
24X24X26	6	57	2000	D7006 4426	.19	D8506 4426	.36	D9506 4426	.40
20X24X26	5	35	1600	D7005 0426	.19	D8505 0426	.36	D9505 0426	.40
20X20X26	5	42	1120	D7005 0026	.19	D8505 0026	.36	D9505 0026	.40
12X24X26	3	21	1000	D7003 2426	.19	D8503 2426	.36	D9503 2426	.40
24X24X19	6	42	1500	D7006 4419	.11	D8506 4419	.30	D9506 4419	.36
20X24X19	5	33	1250	D7005 0419	.11	D8505 0419	.30	D9505 0419	.36
20X20X19	5	30	1120	D7005 0019	.11	D8505 0019	.30	D9505 0019	.36
12X24X19	3	21	750	D7003 2419	.11	D8503 2419	.30	D9503 2419	.36

Purolator®
P.O. Box 32578
Louisville, KY 40232
P: 866-925-2247
F: 502-961-0930
www.purolatorair.com

CONTACT FACTORY TO VERIFY REVISION LEVEL

TOLERANCES
UNLESS OTHERWISE SPECIFIED

FRACTIONAL –
DECIMAL –
ANGLES –

ALL DIMENSIONS IN INCHES

DRAWING NAME: DEFIANT BAG

APPROVED BY: K. Quinn | SPECIFICATION NO.: MKT--P--00315 PG2 | PAGE: 2 OF 2

SCALE: NONE | DWG. SIZE: A | REVISION: NEW | REVISION DATE: 05-19-08

CONFIDENTIAL - DO NOT COPY. THIS MATERIAL IS TRADE SECRET AND PROPRIETARY BEING EXCLUSIVELY OWNED BY CLC AIR . THE EXPRESSION OF THE INFORMATION CONTAINED HEREIN IS PROTECTED UNDER FEDERAL COPYRIGHT LAWS AND ALL COPYING IS PROHIBITED AND MAY BE SUBJECT TO CRIMINAL PENALTIES.